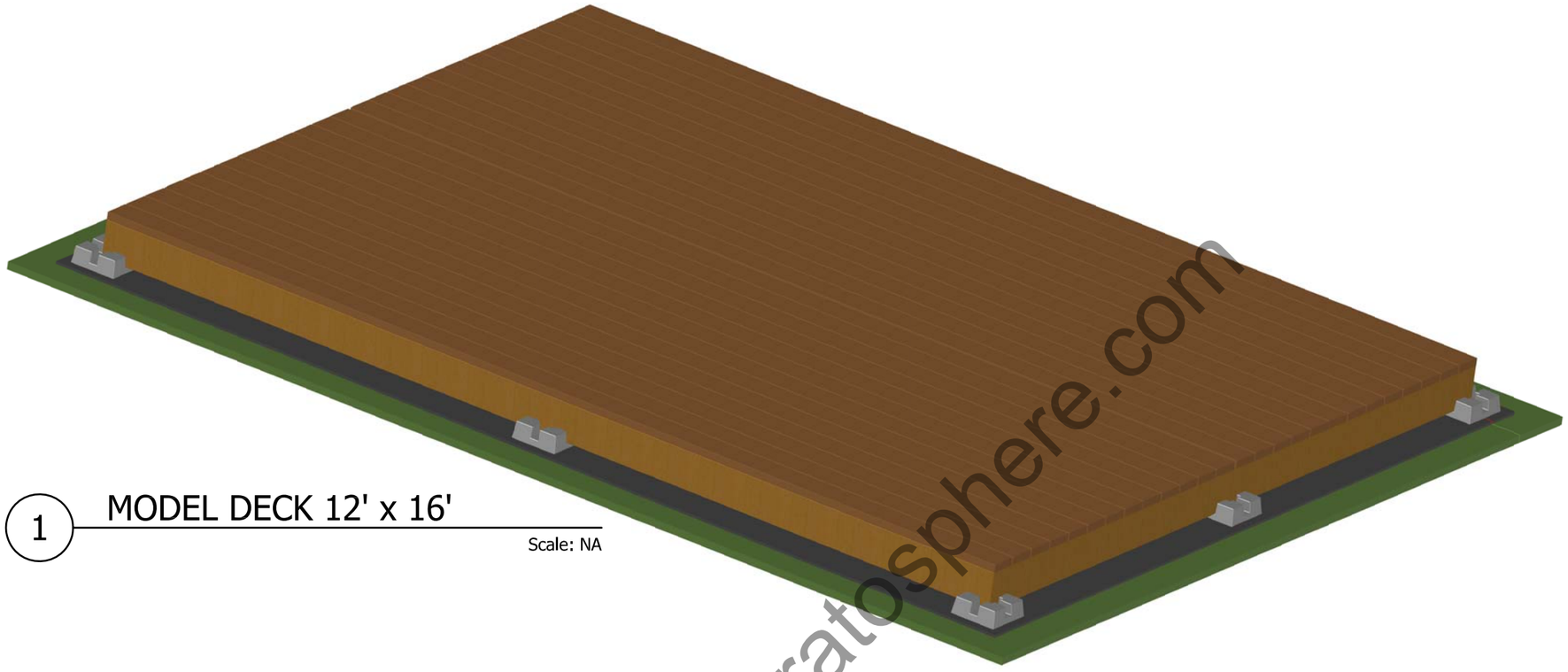

1 MODEL DECK 12' x 16'

Scale: NA

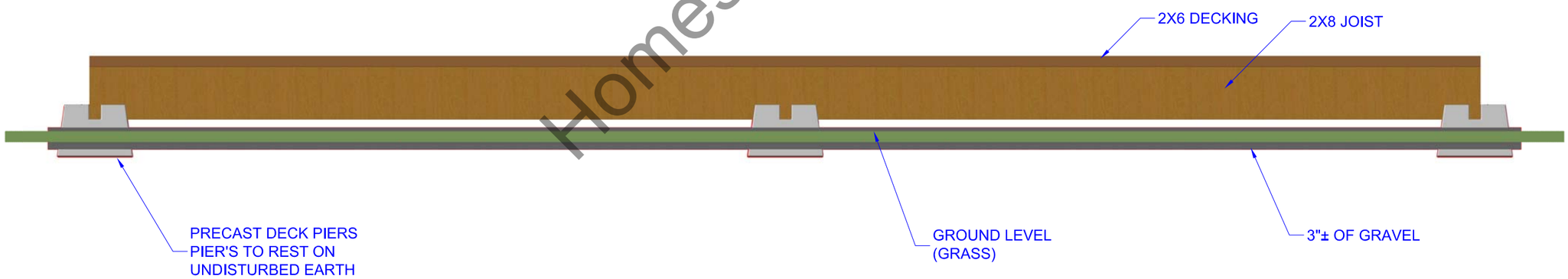

1 SIDE VIEW DECK 12' x 16'

Scale: NA

Outstanding Interior Design and Home Décor Ideas

GENERAL CONTRACTOR:

DATE DRAWN: 11/19/15
DRAWN BY: SCOTTG
SCALE: 3" = 1'
REVISIONS: R1

REFERENCE DRAWING:
UPWORK
PAGE NO. 1.0

Interior Design and Home Decor Ideas - Home Stratosphere

OWNER:

PROJECT NAME:

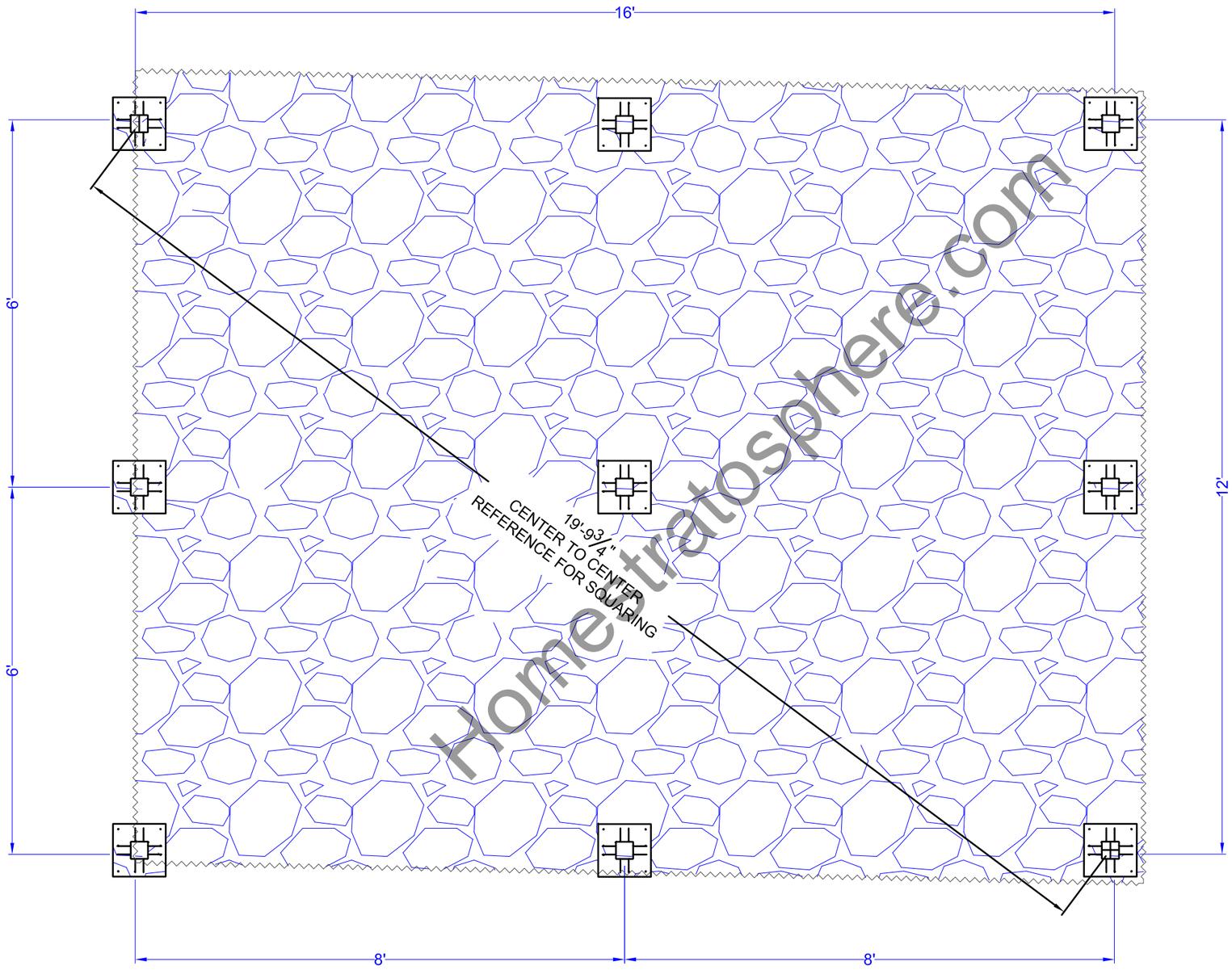

1 DECK PRECAST DECK PEIRS LAYOUT

Scale: 1/2" = 1'

Outstanding Interior Design and Home Décor Ideas

GENERAL CONTRACTOR:

DATE DRAWN: 11/19/15
DRAWN BY: SCOTTG
SCALE: 3" = 1'
REVISIONS: R1

REFERENCE DRAWING:
UPWORK
PAGE NO. 2.0

Interior Design and Home Decor Ideas - Home Stratosphere

OWNER:

PROJECT NAME:

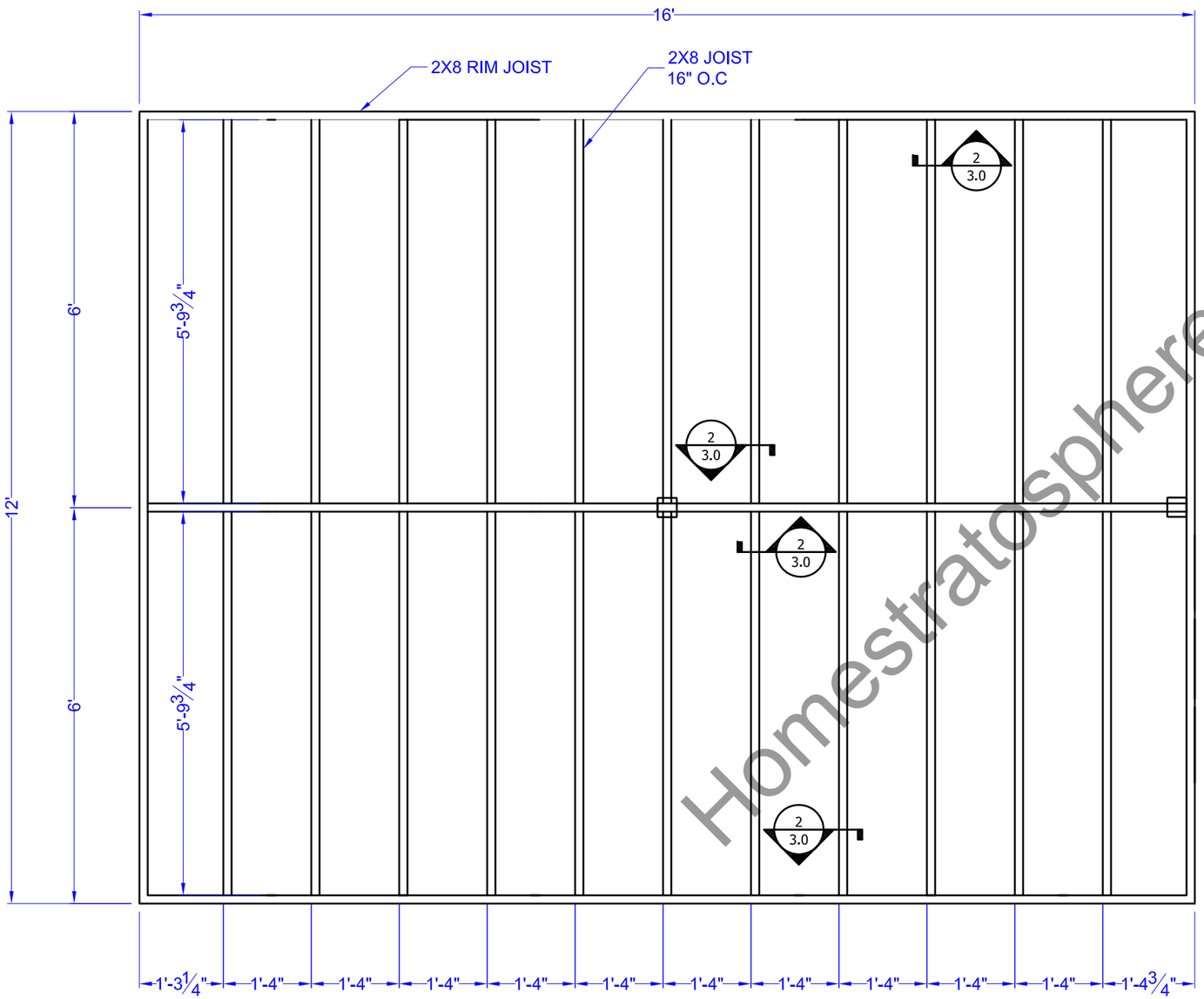

1 DECK FRAMING PLAN

Scale: 1/2" = 1'

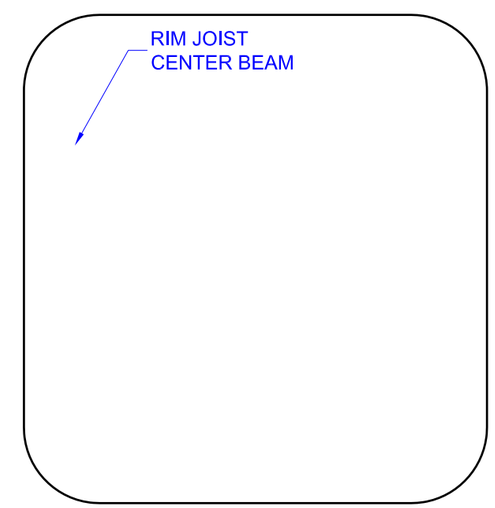

SEE DETAIL D03 PAGE 7.0

2 TYP. JOIST CONNECTION RIM JOIST

Scale: 3" = 1'

Outstanding Interior Design and Home Décor Ideas

GENERAL CONTRACTOR:

DATE DRAWN: 11/19/15
DRAWN BY: SCOTTG
SCALE: 3" = 1'
REVISIONS: R1

REFERENCE DRAWING:
UPWORK
PAGE NO. 3.0

Interior Design and Home Decor Ideas - Home Stratosphere

OWNER:

PROJECT NAME:

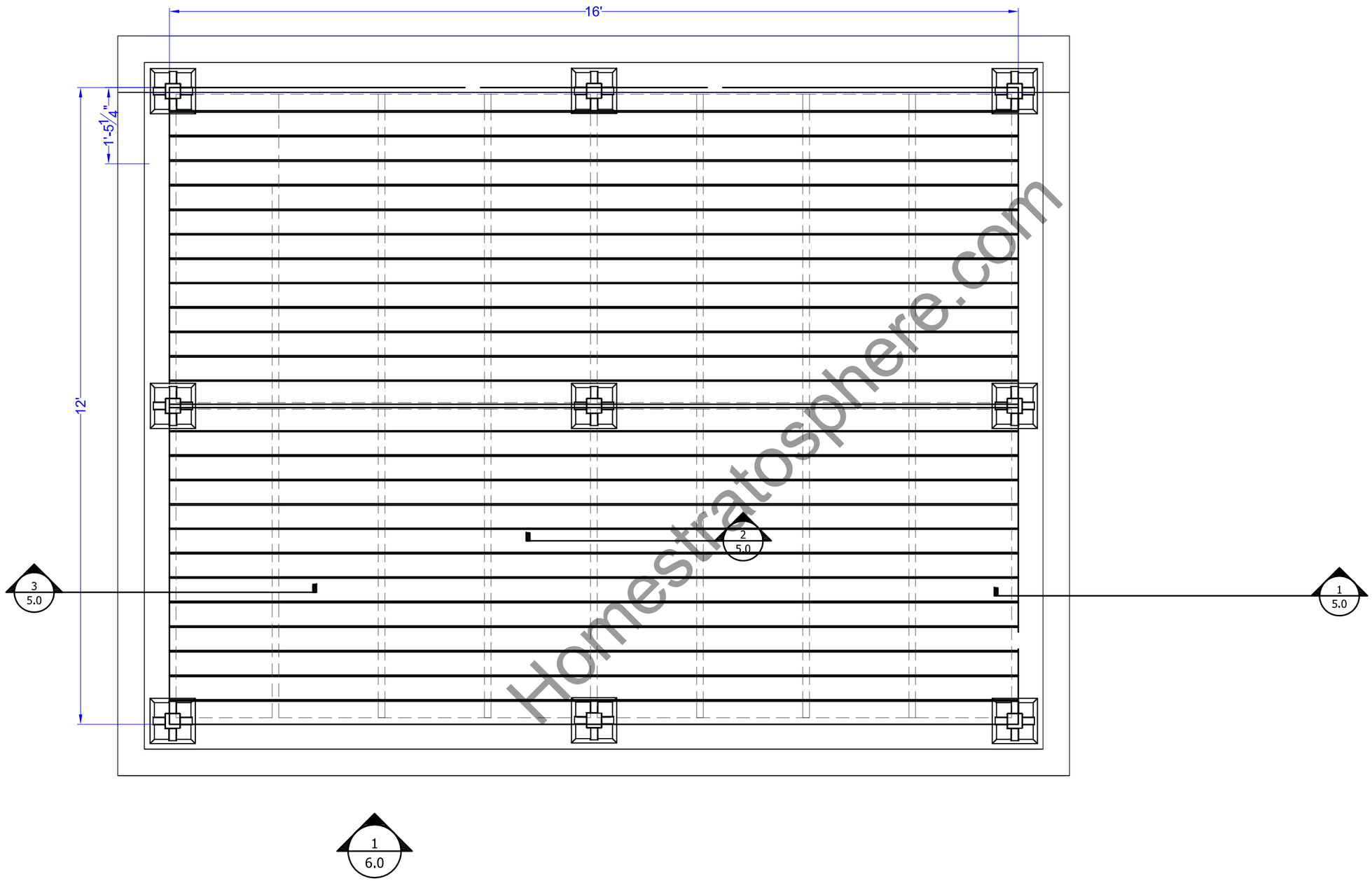

1 TOP VIEW DECK 12'X16'

Scale: 1/2" = 1'

Outstanding Interior Design and Home Décor Ideas

GENERAL CONTRACTOR:

DATE DRAWN: 11/19/15
DRAWN BY: SCOTTG
SCALE: 3" = 1'
REVISIONS: R1

REFERENCE DRAWING:
UPWORK
PAGE NO. 4.0

Interior Design and Home Decor Ideas - Home Stratosphere

OWNER:

PROJECT NAME:

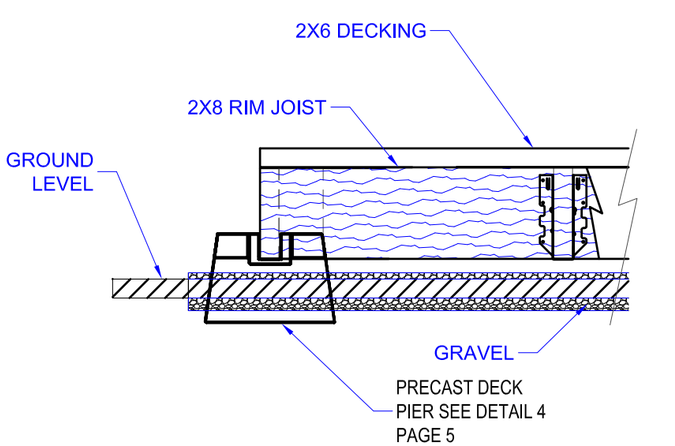

1 END POST SECTION
Scale: 1" = 1'

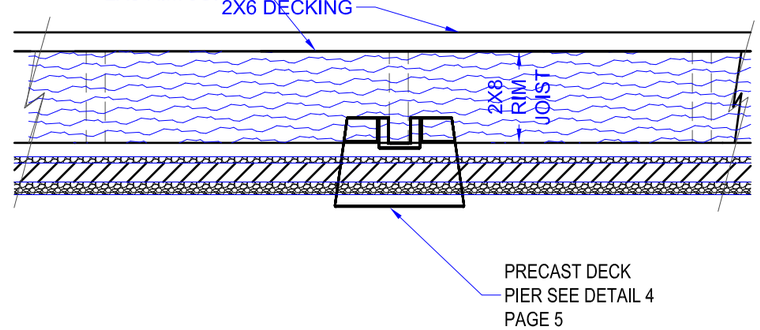

2 CENTER POST SECTION
Scale: 1" = 1'

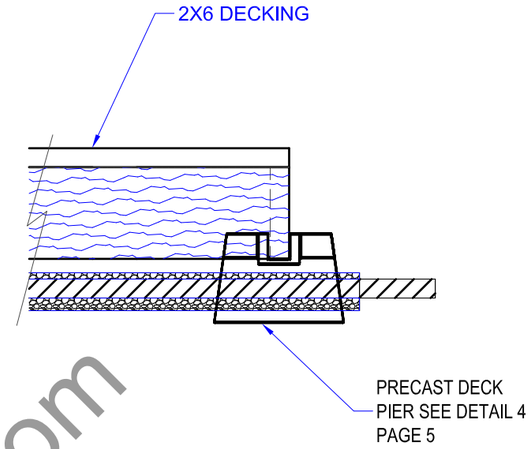

1 END POST SECTION
Scale: 1" = 1'

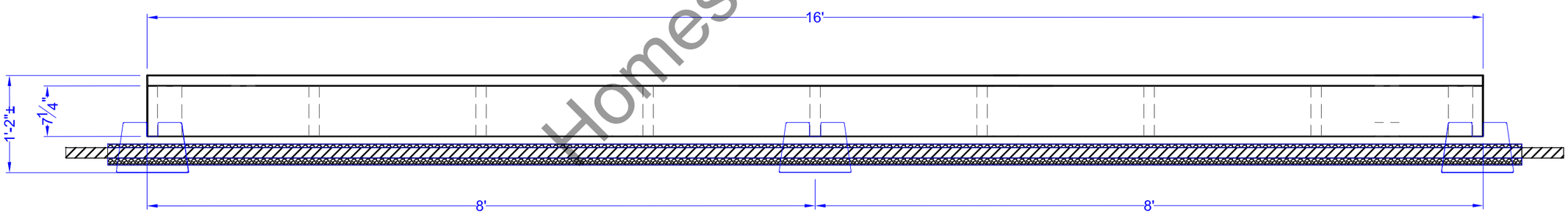

3 SIDE VIEW DECK 12'X16'
Scale: 1/2" = 1'

Outstanding Interior Design and Home Décor Ideas

REFERENCE DRAWING: UPWORK
PAGE NO. 5.0

DATE DRAWN: 11/19/15
DRAWN BY: SCOTTG
SCALE: 3" = 1'
REVISIONS: R1

GENERAL CONTRACTOR:

Interior Design and Home Decor Ideas - Home Stratosphere

OWNER:

PROJECT NAME:

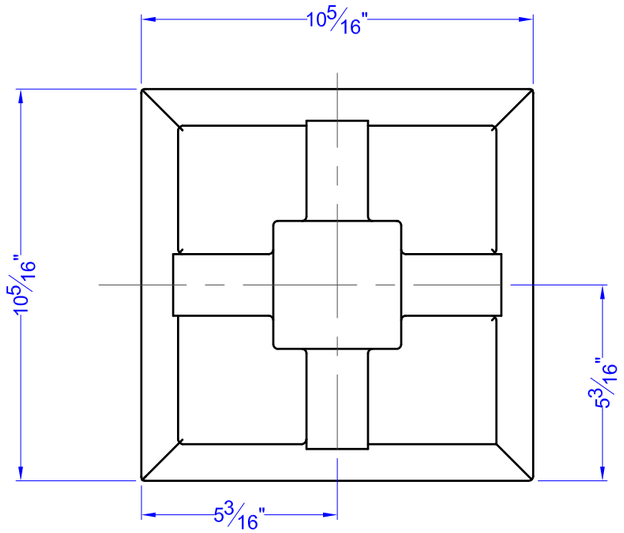

NOTE:
DIMENSIONS ARE APPROXIMATE, MAY VERY UPON WHERE YOU OBTAIN PIERS.

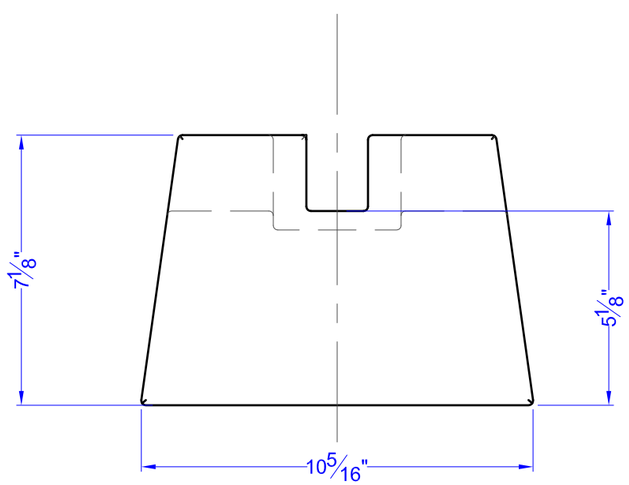

1 PRECAST DECK PIER

Scale: 3" = 1'

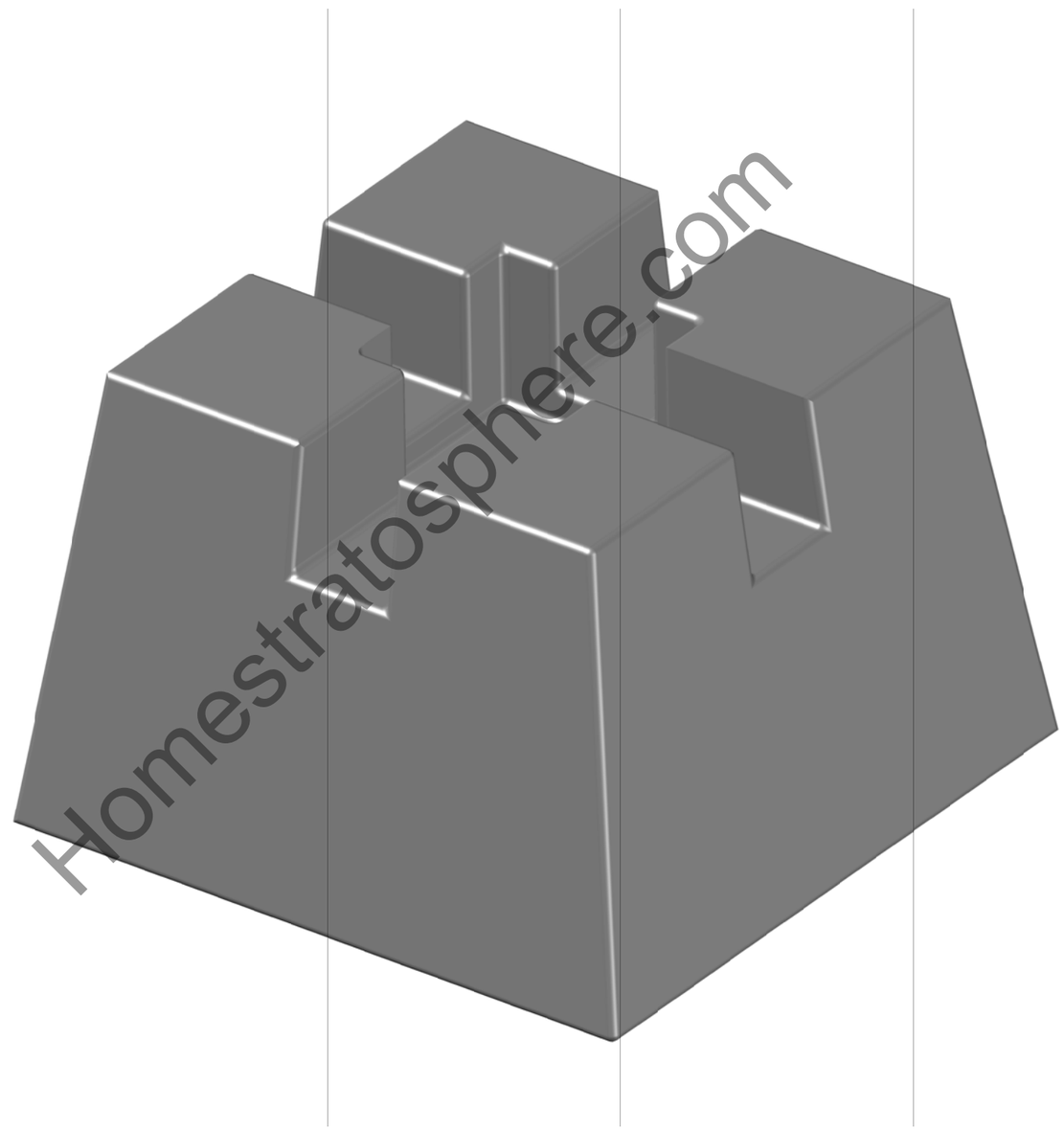

Outstanding Interior Design and Home Décor Ideas

GENERAL CONTRACTOR:

DATE DRAWN: 11/19/15
DRAWN BY: SCOTTG
SCALE: 3" = 1'
REVISIONS: R1

REFERENCE DRAWING:
UPWORK
PAGE NO. 6.0

Interior Design and Home Decor Ideas - Home Stratosphere

OWNER:

PROJECT NAME:

General Notes:

1. Outdoor environments are generally more corrosive to steel. If you choose to use ZMAX®or HDG finish or stainless steel material on an outdoor project, you should periodically inspect your connectors and fasteners or have a professional inspection performed. Regular maintenance, including water-proofing of the wood used in your outdoor project is also a good practice.
2. Coatings Available:
   - 2.1. ZMAX: Galvanized (G185) 1.85 oz. of zinc per square foot of surface area. (hot-dip galvanized per ASTM A653 total both sides). These products require hot-dip galvanized fasteners (fasteners which meet the specifications of ASTM A153).
   - 2.2. HDG - Hot Dip Galvanized: Products are hot-dip galvanized after fabrication (14 ga. and thicker). The coating weight increases with material thickness. The minimum specified coating weight is 2.0 oz. per square foot. (per ASTM A123 total both sides). These products require hot-dip galvanized fasteners (fasteners which meet the specifications of ASTM A153).
   - 2.3. SS - Stainless Steel: Connectors are manufactured from Type 316L stainless steel, and provide greater durability against corrosion. Stainless-steel nails are required with stainless-steel products, and are available from Simpson Strong-Tie.
3. When using stainless steel connectors, use stainless steel fasteners. When applications allow the use of ZMAX/HDG galvanized connectors, use HDG fasteners that meet the specifications of ASTM A153 or equivalent coating offered on Simpson Strong-Tie fasteners.
4. Due to many variables involved with outdoor construction, Simpson Strong-Tie cannot provide estimates on service life of connectors, anchors or fasteners.
5. To obtain optimal performance from Simpson Strong-Tie products, the products must be installed properly and used in accordance with the installation instructions and design limits provided by Simpson Strong-Tie.
6. All installation notes and guidelines within the current Wood Construction Connectors catalog shall apply for the connectors, anchors, and fasteners shown.
7. Simpson Strong-Tie reserves the right to change the specifications, design and models shown without notice or liability for such changes.
8. Simpson Strong-Tie does not guarantee the performance or safety of products that are modified, improperly installed or not used in accordance with the design.
9. All references to bolts or machine bolts (MB) are structural quality through bolts (not lag screws or carriage bolts) equal to or better than ASTM A307, grade A. Bolt holes shall be at least a minimum 1/32" and no more than a maximum of 1/16" larger than the bolt diameter per 2005 NDS Section 11.1.2.
10. Unless noted otherwise, all references to standard cut washers refer to Type A plain washers (W) conforming to the dimensions shown in ASME B18.22.1 for the appropriate rod sizes.
11. Unless stated otherwise, Simpson Strong-Tie cannot and does not make any representation regarding the suitability of use or load-carrying capacities of connectors installed with improper fasteners.

D01 General Notes

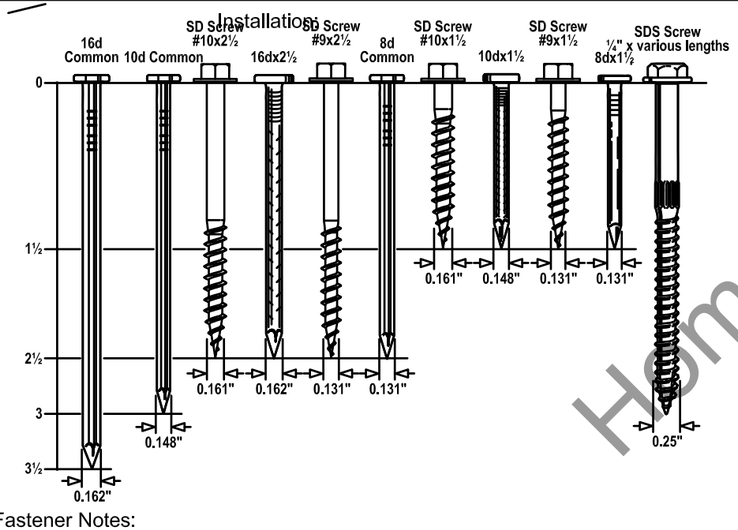

Fastener Notes:

1. The specified quantity, type and size of fastener must be installed in the correct holes on the connector to achieve published loads. Incorrect fastener selection or installation can compromise connector performance and could lead to failure.
2. Nail diameter assumes no coating. See technical bulletin T-NAILGUIDE for more information.
3. The Simpson Strong-Drive ® SD structural-connector screw is the only screw approved for use with our connectors.
4. NAIL reference in tables: 16d = 16d common, 10d = 10d common

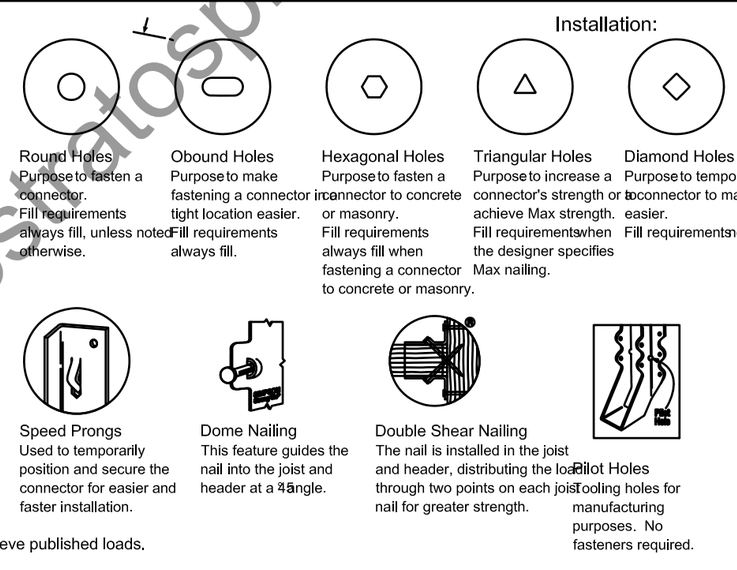

Fastening Identification

D02 Fasteners

SIMPSON Strong-Tie®

Outstanding Interior Design and Home Décor Ideas

GENERAL CONTRACTOR:

DATE DRAWN: 11/19/15
DRAWN BY: SCOTTG
SCALE: 3" = 1'
REVISIONS: R1

REFERENCE DRAWING: UPWORK
PAGE NO. 7.0

PROJECT NAME: Interior Design and Home Decor Ideas - Home Stratosphere

OWNER:

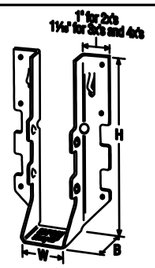

LUS

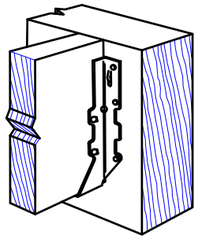

Typical LUS28Z Installation

Installation:

- LUS hangers install with double shear nailing.
- For installations into single 2x headers or ledgers, use the specified full length fasteners into the joist and the following fasteners into the header for reduced loads in accordance with www.strongtie.com:
  - 10dx1½ nails for installations with Nails
  - SD #9x1½ for LUS28Z and LUS210Z installations with SD Screws
  - SD #10x1½ for LUS26-2Z and LUS210-2Z installations with SD Screws

Model No.	Dimensions (in.)			Fasteners			
				Nails		SD Screws	
	W	H	B	Header	Joist	Header	Joist
LUS26Z	1 9/16	4 3/4	1 3/4	4-10d	4-10d	-	-
LUS28Z	1 9/16	6 5/8	1 3/4	6-10d	4-10d	6-SD #9x2½	4-SD #9x2½
LUS210Z	1 9/16	7 13/16	1 3/4	8-10d	4-10d	8-SD #9x2½	4-SD #9x2½
LUS26-2Z	3 1/8	4 7/8	2	4-16d	4-16d	4-SD #10x2½	4-SD #10x2½
LUS210-2Z	3 1/8	9	2	8-16d	6-16d	8-SD #10x2½	6-SD #10x2½

1. indicates connector is available in stainless steel. Replace Z in model number with SS when ordering.
2. Refer to current Wood Construction Connectors catalog for additional information.

D03 LUS Joist Hangers

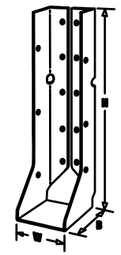

LUC

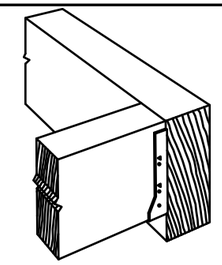

Typical HUC Installation (LUC Similar)

Installation:

- For HUC installations, models have triangle and round holes. To achieve maximum loads, fill both round and triangle holes (fastener quantities listed fill both holes).
- For installations into single 2x headers or ledgers, use the specified full length fasteners into the joist and the following fasteners into the header for reduced loads in accordance with www.strongtie.com:
  - 10dx1½ nails for installations with Nails
  - SD #9x1½ for LUC26Z and LUC210Z installations with SD Screws

Model No.	Dimensions (in.)			Fasteners			
				Nails		SD Screws	
	W	H	B	Header	Joist	Header	Joist
LUC26Z	1 9/16	4 3/4	1 3/4	6-10d	4-10dx1½	6-SD #9x2½	4-SD #9x1½
LUC210Z	1 9/16	7 3/4	1 3/4	10-10d	6-10dx1½	10-SD #9x2½	6-SD #9x1½
HUC26-2Z	3 1/8	5 3/8	2 1/2	12-16d	6-10d	-	-
HUC28-2Z	3 1/8	7	2 1/2	14-16d	6-10d	-	-
HUC210-2Z	3 1/8	8 13/16	2 1/2	18-16d	10-10d	-	-

1. indicates connector is available in stainless steel. Replace Z in model number with SS when ordering.
2. Refer to current Wood Construction Connectors catalog for additional information.

D04 LUC, HUC Joist Hangers

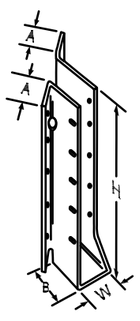

SUL Skewed Left Hanger (SUR is Skewed Right)

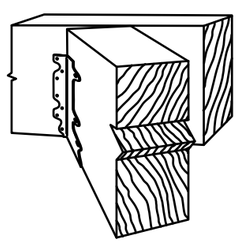

Typical SUR Installation

Installation:

- The joist may be square cut or bevel cut.
- These hangers will normally accommodate a 40° to 50° skew.

Model No.	Joist Size	Dimensions (in.)					Fasteners	
		W	H	B	A1	A2	Header	Joist
SUR/L26Z	2x6, 8	1 9/16	5	2	1 1/8	1 5/16	6-16d	6-10dx1½
SUR/L210Z	2x10, 12	1 9/16	8 1/8	2	1 1/8	1 5/16	10-16d	10-10dx1½
SUR/L210-2Z	(2) 2x10, 12	3 1/8	8 11/16	2 5/8	1 7/16	2 3/8	14-16d	6-16dx2½

1. indicates connector is available in stainless steel. Replace Z in model number with SS when ordering.
2. Refer to current Wood Construction Connectors catalog for additional information.

D05 SUR/SUL 45° Skewed Joist Hangers

Installation:

- Field skewable; bend one time only.
- Joist must be constrained against rotation (for example, with solid blocking) using a single LS per connection.

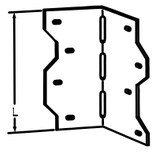

LS

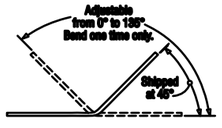

LS Top View

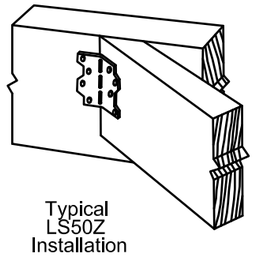

Typical LS50Z Installation

Model No.	L (in)	Fasteners
LS30Z	3 3/8	6-10d
LS50Z	4 7/8	8-10d
LS70Z	6 3/8	10-10d

1. indicates connector is available in stainless steel. Replace Z in model number with SS when ordering.
2. Refer to current Wood Construction Connectors catalog for additional information.

D06 LS Framing Angles

SIMPSON Strong-Tie®

Outstanding Interior Design and Home Décor Ideas

REFERENCE DRAWING: UPWORK
PAGE NO. 8.0

DATE DRAWN: 11/19/15
DRAWN BY: SCOTTG
SCALE: 3" = 1'
REVISIONS: R1

GENERAL CONTRACTOR:

Interior Design and Home Decor Ideas - Home Stratosphere

OWNER:

PROJECT NAME:

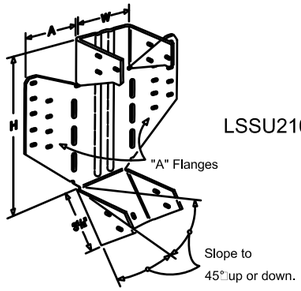

LSSU210Z

Installation:

- Follow 3-step installation sequence for skewed or sloped/skewed applications.
- Do not substitute 10dx1½ nails for face nails.
- To see an installation video on this product, visit www.strongtie.com

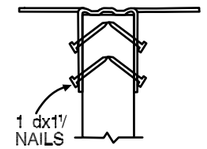

STEP 1
Nail hanger to slope-cut carried member, installing seat nail first. No bevel necessary for skewed installation. Install joist nails at 45° angle.

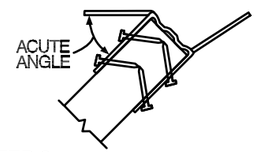

STEP 2
Skew flange from 0-45°. Bend other flange back along centerline of slots until it meets the header. Bend one time only.

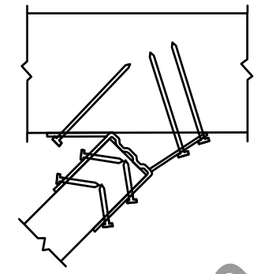

STEP 3
Attach hanger to the carrying member, acute angle side first (see footnote 1). Install nails at an angle.

Model No.	Dimensions (in.)			Fasteners	
	W	H	A	Header	Joist
LSU26Z	1 9/16	4 7/8	1 1/2	6-10d	5-10dx1 1/2
LSSU210Z	1 9/16	8 1/2	1 5/8	10-10d	7-10dx1 1/2

1. For skewed LSSU, the inner most face fasteners on the acute angle side are not installed.
2. Refer to current Wood Construction Connectors catalog for additional information.

D07 LSU, LSSU Adjustable Joist Hangers

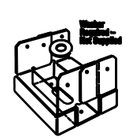

ABA44Z

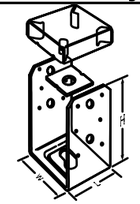

ABU44Z

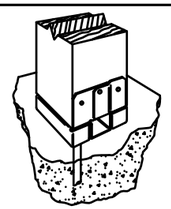

Typical ABA Installation
(ABU Similar)

Installation:

- ABA, ABU - for pre-pour installed anchors. For Simpson Strong-Tie epoxy or mechanical anchors, select and install in accordance with www.strongtie.com.
- Products require washers between the nut and the base. Washers are supplied with the ABU but not the ABA, which requires a standard cut washer.

Model No.	Post Size	Dimensions (in.)				Anchor Dia.	Post Fasteners			
		W	L	H	HB		Nails	SD Screws	Machine Bolts Qty.	Machine Bolts Dia.
ABA44Z	4x4	3 9/16	3 1/8	3 1/16	-	1/2	6-10d	6-SD #9x1½	-	-
ABU44Z	4x4	3 9/16	3	5 1/2	1 3/4	5/8	12-16d	12-SD #10x1½	2	1/2
ABA46Z	4x6	3 9/16	5 3/16	3 1/8	-	5/8	8-16d	8-SD #10x1½	-	-
ABU46Z	4x6	3 9/16	5	7	2 5/8	5/8	12-16d	-	2	1/2
ABA66Z	6x6	5 1/2	5 1/4	3 1/8	-	5/8	8-16d	8-SD #10x1½	-	-
ABU66Z	6x6	5 1/2	5	6 1/16	1 3/4	5/8	12-16d	-	2	1/2
ABU88Z	8x8	7 1/2	7	7	-	2 - 5/8	18-16d	-	-	-

1. ▷ indicates connector is available in stainless steel. Replace Z in model number with SS when ordering.
2. Refer to current Wood Construction Connectors catalog for additional information.

D08 ABA, ABU Post Bases

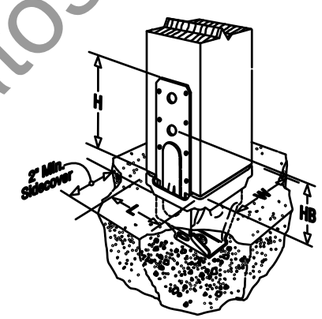

Typical PBS

Installation:

- Embed into wet concrete up to the bottom of the 1" standoff base plate. A 2" minimum side cover is required to obtain the full load. Holes in the bottom of the straps allow for free concrete flow.
- Allow concrete to cure before installation of the post.

Model No.	Dimensions (in.)				Post Fasteners			
	W	L	H	HB	Nails	SD Screws	Machine Bolts Qty.	Machine Bolts Dia.
PBS44AHDG	3 9/16	3 1/2	6 1/4	3 7/16	14-16d	14-SD #10x1½	2	1/2
PBS66HDG	5 1/2	5 3/8	6 1/2	3 11/16	14-16d	-	2	1/2

1. Refer to current Wood Construction Connectors catalog for additional information.

D09 PBS Post Bases

SIMPSON Strong-Tie®

Outstanding Interior Design and Home Décor Ideas

REFERENCE DRAWING: UPWORK
PAGE NO. 9.0
DATE DRAWN: 11/19/15
DRAWN BY: SCOTTG
SCALE: 3" = 1'
REVISIONS: R1
GENERAL CONTRACTOR:
OWNER:
PROJECT NAME:

Interior Design and Home Decor Ideas - Home Stratosphere

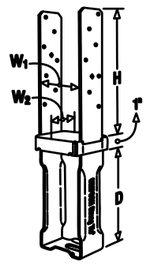

Typical CBSQ

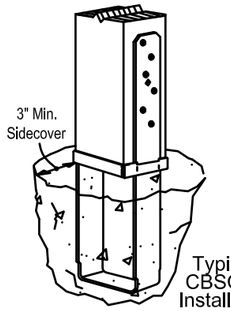

Typical CBSQ44 Installation

Installation:

- Install Simpson Strong-Tie SDS ¼" x 2" wood screws, which are provided with the column base, with a ⅜" hex head driver. (Lag screws will not achieve the same load.)
- Allow concrete to cure before installation of the post.
- For full loads, a minimum of 3" side cover shall be provided.

Model No.	Post Size	Dimensions (in.)				Number of SDS Screws
		W1	W2	D	H	
CBSQ44-SDS2HDG	4x4	3 9/16	3 1/2	7 1/8	8 3/8	14-SDS ¼"x2"
CBSQ46-SDS2HDG	4x6	3 9/16	5 5/16	7 13/16	8 11/16	14-SDS ¼"x2"
CBSQ66-SDS2HDG	6x6	5 1/2	5 1/2	6 7/8	8 3/4	14-SDS ¼"x2"
CBSQ86-SDS2HDG	6x8	7 1/2	5 3/8	6 1/8	8 11/16	12-SDS ¼"x2"
CBSQ88-SDS2HDG	8x8	7 1/2	7 3/8	6 1/8	8 11/16	12-SDS ¼"x2"

1. indicates connector is available in stainless steel. Replace -SDS2HDG in model number with SS when ordering.
2. Refer to current Wood Construction Connectors catalog for additional information.

D10 CBSQ Post Bases

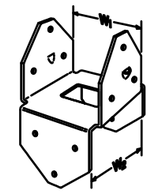

BCS
(BC Similar)

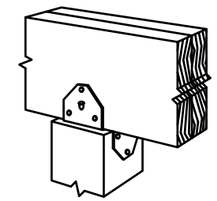

Typical BCS Installation (BC Similar)

Installation:

- BCS: Install dome nails on beam; drive nails at an angle through the beam into the post below.
- BC: Do not install bolts into pilot holes.

Model No.	Dimensions (in.)						Fasteners			
							Nails		SD Screws	
	W1	W2	L1	L2	H1	H2	Beam Flange	Post Flange	Beam Flange	Post Flange
BC4Z	3 9/16	3 9/16	2 7/8	2 7/8	3	3	6-16d	6-16d	6-SD #10x1½	6-SD #10x1½
BC6Z	5 1/2	5 1/2	4 3/8	4 3/8	3 3/8	3 3/8	12-16d	12-16d	-	-
BCS2-2/4Z	3 1/8	3 9/16	2 7/8	2 7/8	2 15/16	2 15/16	8-10d	6-10d	8-SD #9x2½	6-SD #9x2½
BCS2-3/6Z	4 5/8	5 9/16	4 3/8	2 7/8	3 5/16	2 15/16	12-16d	6-16d	-	-

1. indicates connector is available in stainless steel. Replace Z in model number with SS when ordering.
2. Refer to current Wood Construction Connectors catalog for additional information.

D11 BC, BCS Post Caps

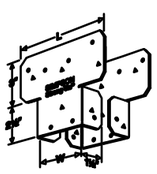

AC

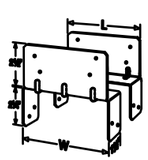

LPCZ

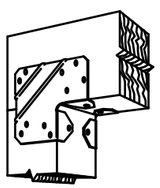

Typical LCE4Z Installation

Installation:

- Install in pairs.
- For LCE4Z installations on mitered corner conditions, refer to www.strongtie.com for more information.

Model No.	Dimensions (in.)		Fasteners			
			Nails		SD Screws	
	W	L	Beam	Post	Beam	Post
AC4Z	3 9/16	6 1/2	14-16d	14-16d	14-SD #10x1½	14-SD #10x1½
AC6Z	5 1/2	8 1/2	14-16d	14-16d	14-SD #10x1½	14-SD #10x1½
LPC4Z	3 9/16	3 1/2	8-10d	8-10d	8-SD #9x1½	8-SD #9x1½
LPC6Z	5 9/16	5 1/2	8-10d	8-10d	-	-
LCE4Z	-	5 3/8	14-16d	10-16d	14-SD #10x1½	10-SD #10x1½

1. indicates connector is available in stainless steel. Replace Z in model number with SS when ordering.
2. Refer to current Wood Construction Connectors catalog for additional information.

D12 AC, LPC, LCE Post Caps

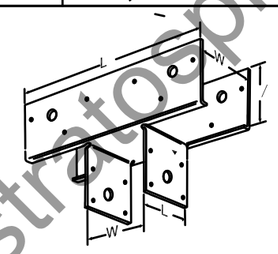

PC

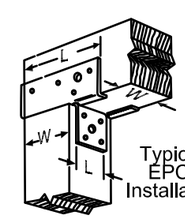

Typical EPC Installation

Installation:

- For end condition, specify EPC
- Use all specified fasteners.
- Do not install bolts into pilot holes.

Model No.	Post Size	Dimensions (in.)					Fasteners					
							Nails			SD Screws		
							Post	Beam		Post	Beam	
		W1	W2	L1	L2	L3		PC	EPC		PC	EPC
PC44-16Z	4x4	3 9/16	3 9/16	2 5/8	11	7 5/16	8-16d	12-16d	8-16d	8-SD #10x1½	12-SD #10x1½	8-SD #10x1½
PC46-16Z	4x6	3 9/16	5 1/2	2 5/8	13	9 1/4	8-16d	12-16d	8-16d	-	-	-
PC66-16Z	6x6	5 1/2	5 1/2	4 9/16	13	9 1/4	8-16d	12-16d	8-16d	-	-	-

1. Refer to current Wood Construction Connectors catalog for additional information.

D13 PC, EPC Post Caps

SIMPSON Strong-Tie®

Outstanding Interior Design and Home Décor Ideas

REFERENCE DRAWING: UPWORK
PAGE NO. 10.0

DATE DRAWN: 11/19/15
DRAWN BY: SCOTTG
SCALE: 3" = 1'
REVISIONS: R1

GENERAL CONTRACTOR:

OWNER:

PROJECT NAME: Interior Design and Home Decor Ideas - Home Stratosphere

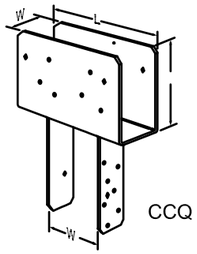

CCQ

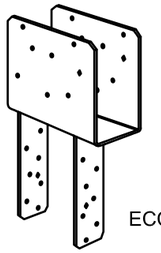

ECCQ

Installation:

- For end conditions, specify ECCQ
- Install Simpson Strong-Tie SDS ¼" x 2½" screws, which are provided with the column cap, with a ⅜" hex head driver. SDS screws install best with a low speed ½" drill.
- Beam depth must be a minimum 7".

Typical CCQ Installation

Model No.	Beam Width	Dimensions (in.)					No. of SDS ¼"x 2½" Screws	
		W1	W2	L1		H		
				CCQ	ECCQ		Beam	Post
▷ CCQ3-6HDG	3 1/8	3 1/4	5 1/2	11	8 1/2	7	16	14
▷ CCQ44HDG	4x	3 5/8	3 5/8	11	8 1/2	7	16	14
▷ CCQ46HDG	4x	3 5/8	5 1/2	11	8 1/2	7	16	14
▷ CCQ48HDG	4x	3 5/8	7 1/2	11	8 1/2	7	16	14
▷ CCQ66HDG	6x	5 1/2	5 1/2	11	8 1/2	7	16	14
CCQ68HDG	6x	5 1/2	7 1/2	11	8 1/2	7	16	14

1. ▷ indicates connector is available in stainless steel. Replace HDG in model number with SS when ordering.
2. Refer to current Wood Construction Connectors catalog for additional information.

D14 CCQ, ECCQ Post Caps

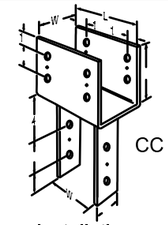

CC

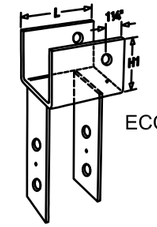

ECC

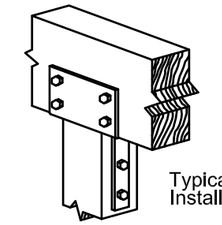

Typical CC Installation

Installation:

- For end conditions, specify ECC
- Bolt holes shall be a minimum 1/32" to a maximum 1/16" largethan the bolt diameter.
- Contact engineered wood manufacturers for connections that are not through the wide face.
- Beam depth must be at least as tall as H1.

Model No.	Beam Width	Dimensions (In.)					Machine Bolts			
		W1	W2	L		H1	Dia.	Beam		Post
				CC	ECC			CC	ECC	
▷ CC3-1/4-4HDG	3 1/8	3 1/4	3 5/8	11	7 1/2	6 1/2	5/8	4	2	2
▷ CC3-1/4-6HDG	3 1/8	3 1/4	5 1/2	11	7 1/2	6 1/2	5/8	4	2	2
▷ CC44HDG	4x	3 5/8	3 5/8	7	5 1/2	4	5/8	2	1	2
▷ CC66HDG	6x	5 1/2	5 1/2	11	7 1/2	6 1/2	5/8	4	2	2

1. ▷ indicates connector is available in stainless steel. Replace HDG in model number with SS when ordering.
2. Refer to current Wood Construction Connectors catalog for additional information.

D15 CC, ECC Post Caps

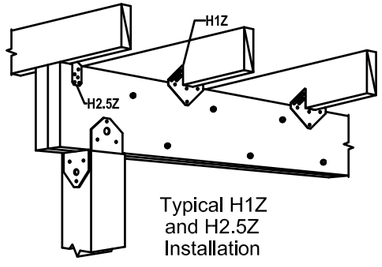

Typical H1Z and H2.5Z Installation

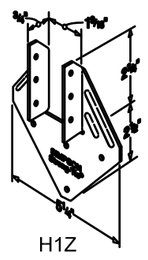

H1Z

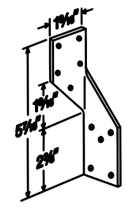

H2.5Z

Installation:

- Use all specified fasteners.

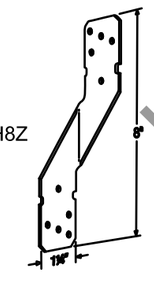

H8Z

Model No.	Fasteners			
	Nails		SD Screws	
	To Joist	To Beam	To Joist	To Beam
H1Z	6-8dx1½	4-8dx1½	6-SD #9x1½	4-SD #9x1½
H2.5Z	5-8dx1½	5-8dx1½	5-SD #9x1½	5-SD #9x1½
H8Z	5-10dx1½	5-10dx1½	5-SD #9x1½	5-SD #9x1½

1. indicates connector is available in stainless steel. Replace Z in model number with SS when ordering.
2. Refer to current Wood Construction Connectors catalog for additional information.

D16 H Hurricane Ties

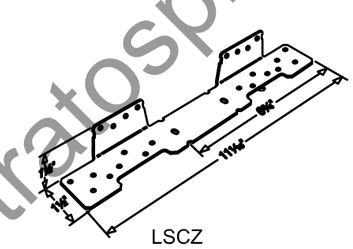

LSCZ

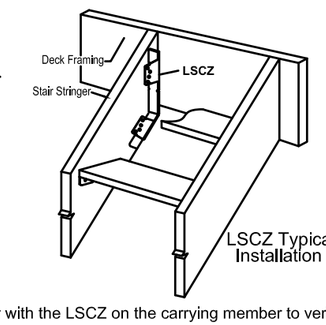

LSCZ Typical Installation

Installation:

- Before fastening, position the stair stringer with the LSCZ on the carrying member to verify where the bend should be located.
- Tabs on the LSCZ must be positioned to the inside of the stairs.
- The fastener that is installed into the bottom edge of the stringer must go into the second-to-last hole.
- A minimum distance of ¾" measured from the lowest rim-joist fastener to the edge of rim joist is required.

Model No.	Fasteners					
	Nails			SD Screws		
	Rim Joist	Stringer Wide Face	Stringer Narrow Face	Rim Joist	Stringer Wide Face	Stringer Narrow Face
▷ LSCZ	8-10dx1½	8-10dx1½	1-10dx1½	8-SD #9x1½	8-SD #9x1½	1-SD #9x1½

1. indicates connector is available in stainless steel. Replace SS in model number with when ordering. Stainless steel models must be fastened with nails.
2. Refer to current Wood Construction Connectors catalog for additional information.

D17 LSC Stair Stringer Connector

SIMPSON Strong-Tie®

Outstanding Interior Design and Home Décor Ideas

REFERENCE DRAWING: UPWORK
PAGE NO. 11.0

DATE DRAWN: 11/19/15
DRAWN BY: SCOTTG
SCALE: 3" = 1'
REVISIONS: R1

GENERAL CONTRACTOR:

Interior Design and Home Decor Ideas - Home Stratosphere

OWNER:

PROJECT NAME:

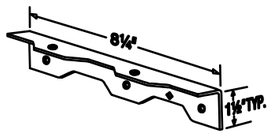

TA9Z
(TA10Z length = 10 1/4")

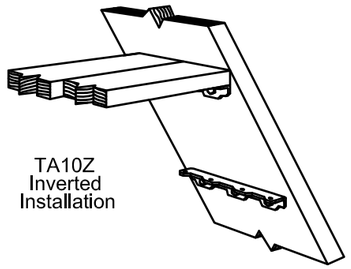

TA10Z
Inverted
Installation

Installation:
- Use all specified fasteners.
- For double 2x6 treads, install TA10Z inverted with 4 screws installed into the treads.

Model No.	Fasteners	
	Stringer	Tread
▷ TA9Z	3-SDS ¼"x1½"	2-SDS ¼"x1½"
▷ TA10Z	3-SDS ¼"x1½"	4-SDS ¼"x1½"
▷ TA10Z	4-SDS ¼"x1½"	3-SDS ¼"x1½"

1. ▷ indicates connector is available in stainless steel. Replace Z in model number with SS when ordering.
2. Refer to current Wood Construction Connectors catalog for additional information.

D18 TA Tread Angle

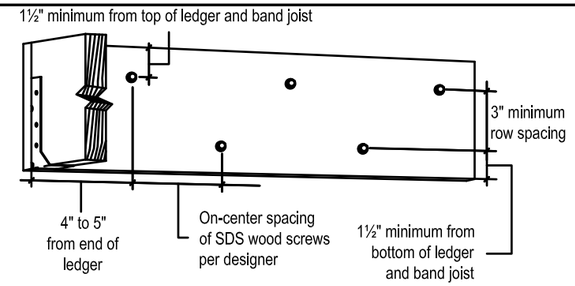

SDS Ledger Installation

SDS
Screw

Size (in.)	Model No.	Thread Length (in.)
▷ ¼" x 3½"	SDS25312	2¼
¼" x 5"	SDS25500	2¾

1. ▷ indicates connector is available in stainless steel. Add SS to model number when ordering.
2. Refer to current F-SDSLDGR for spacing and additional information.
3. The screws shall be staggered from the top to the bottom along the horizontal run of the deck ledger per IRC 2009 Section R502.2.2.1.1.

Installation:
- Install Simpson Strong-Tie SDS wood screws with a ⅜" hex head driver.
- SDS screws install best with a low speed ½" drill.

D19 SDS Screws

Installation:
- Install Simpson Strong-Tie SDS wood screws with a ⅜" hex head driver. SDS screws install best with a low speed high torque drill.
- A standard cut washer (provided) must be installed between the nut and the DTT2Z seat.
- Bolt holes shall be a minimum 1/32" to a maximum 1/16" larger than the bolt diameter.

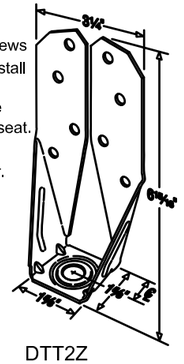

DTT2Z

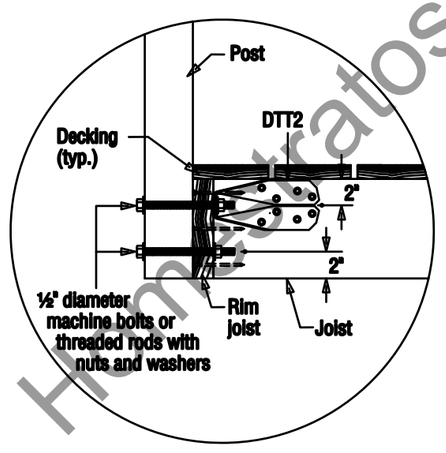

DTT2Z Installed as a Lateral Connector for a Deck Guardrail Post.
For more information on guardrail post connections, and installation instructions, see technical bulletin T-GRDRLPST (available at www.strongtie.com).

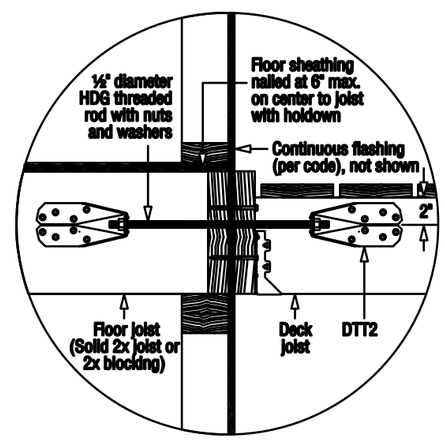

DTT2Z Installed as a Lateral Connector for a Deck-to-House Lateral Load Connection
For more information on this connection, and installation instructions, see technical bulletin T-DECKLATLOAD (available at www.strongtie.com).

Model No.	CL	Anchor Dia.	Fasteners
▷ DTT2Z	13/16	1/2"	8-SDS ¼"x1½"

1. ▷ indicates connector is available in stainless steel. Replace Z in model number with SS when ordering.
2. Refer to T-GRDRLPST and T-DECKLATLOAD for additional information.

D20 DTT2Z Deck Tension Tie

SIMPSON Strong-Tie®

Outstanding Interior Design and Home Décor Ideas

REFERENCE DRAWING: UPWORK
PAGE NO. 12.0

DATE DRAWN: 11/19/15
DRAWN BY: SCOTTG
SCALE: 3" = 1'
REVISIONS: R1

GENERAL CONTRACTOR:

Interior Design and Home Decor Ideas - Home Stratosphere

OWNER:

PROJECT NAME:

TOOL & MATERIAL CHECKLIST

- 0 Deck Lumber, Fasteners
- 0 Hangers
- 0 Hammer/Saw/Level
- 0 Carpenter's Square
- 0 Shovel/Trowel
- 0 Cement
- 0 Chalkline
- 0 Tape Measure
- 0 Drill/Drill Bits
- 0 Adjustable Wrench
- 0 Safety Glasses
- 0 Marking Pencils

Read This Entire How-To Booklet for Specific Tools and Materials Not Noted in The Basics Listed Above

Think of a deck as a floor structure. It has joists to support the flooring material (decking) and posts to hold the unit up off the ground—slightly elevated or higher.

The lumber can be redwood, cedar, cypress, or pressure treated fir, hemlock, spruce. The footings should be concrete, and any support posts 6X6-inches square. You can use 4X4-inch posts up to about 6 feet of deck height; the larger size is recommended just to make sure the support is always adequate. Refer to the beam, post, and span tables included.

The deck design can be square, rectangular, and, perhaps, somewhat free-form or two-level. Plan and design the deck before buying any tools and materials. By doing so, you will eliminate many mistakes and save time and money throughout the project.

This booklet is about building basics only. It does not address deck design in any detail.

NOTE: You may need a building permit to construct a deck in your community. Check with the Building Department authority in the community. The usual procedure is to submit a drawing of the proposed deck structure to the building inspector in the Building Department. Any changes to meet local codes and requirements will be indicated. If okay, you will be issued a building permit usually for a fee. The permit may be time limited —probably not to exceed 3, 6, 9, or 12 months.

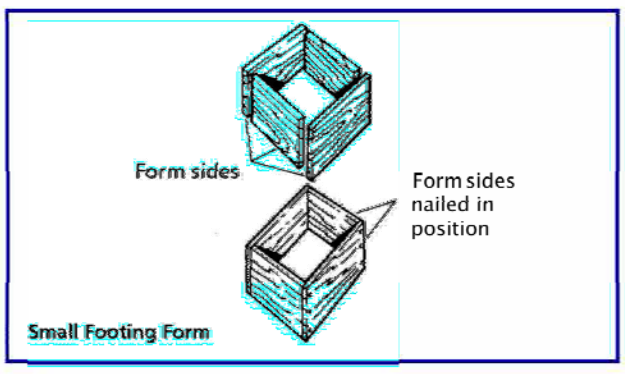

While you're building the deck, an inspector may visit to examine various parts of construction.

Two vital points will be the foundation or piers and the completed structure. The procedure varies widely from community to community. It is important that you check before starting any building procedures. Keep in mind that the codes are there to protect you. Another good idea is to let your neighbor know that you're building a deck (or a fence structure to go with the deck). You may need the neighbor's cooperation, especially if site access is needed by trucks.

BUILDING BASICS

Most decks have 8 building elements: concrete footings; concrete piers; posts; a ledger support strip; beams; joists; rim (skirt) joists; decking. There are three options: railings, benches, and stair steps (see How-To Booklet #3111).

There are 11 deck building procedures. In order: design the deck; obtain the necessary building permits; buy the materials; prepare the site; layout the Footings; set the footings; set the posts and beams; Install the joists; nail on the decking; trim the decking; install any options such as railings and benches.

CONCRETE FOOTINGS

The building codes in your community will be very specific about this deck component (usually). However, here are several rules of thumb for planning purposes:

If possible, footings should be placed on undisturbed soil or rock. The footings must extend below frost line in your area, which ranges from 24 inches minimum to 48 inches maximum. You can find out the frost line depth in your area by phoning the National Weather Service. If this agency is not conveniently reachable, your local Building Department will know the frost line depth.

Footings usually are placed concrete in rectangular, square, or circular shapes depending on the post connection. Most footings extend 2 to 6

MINIMUM BEAM SIZES AND SPANS

SPECIES GROUP 1	SPACING BETWEEN BEAMS, FT.								
Beam size	4	5	6	7	8	9	10	11	12
4x6" x	6	6	6						
3x8" x	8	8	7	7	6	6	6		
4x8" x	10	9	8	7	7	6	6	6	
3x10" x	11	10	9	8	8	7	7	6	6
4x10" x	12	11	10	9	9	8	8	7	7
3x12" x		12	11	10	9	9	8	8	8
4x12" x			12	12	11	10	10	9	9
6x10" x					12	11	10	10	10
6x12" x						12	12	12	12
SPECIES GROUP 2									
4x6" x	6	6							
3x8" x	7	7	6	6					
4x8" x	9	8	7	7	6	6			
3x10" x	10	9	8	7	7	6	6	6	
4x10" x	11	10	9	8	8	7	7	7	6
3x12" x	12	11	10	9	8	8	7	7	7
4x12" x		12	11	10	10	9	9	8	8
6x10" x			12	11	10	10	9	9	9
6x12" x				12	12	12	11	11	10
SPECIES GROUP 3									
4x6" x	6								
3x8" x	7	6							
4x8" x	8	7	6	6					
3x10" x	9	8	7	6	6	6			
4x10" x	10	9	8	8	7	7	6	6	6
3x12" x	11	10	9	8	7	7	7	6	6
4x12" x	12	11	10	9	9	8	8	7	7
6x10" x		12	11	10	9	9	8	8	8
6x12" x			12	12	11	11	10	10	8

Beams are on edge. Spans are center to center distances between posts or supports.

Grade is No. 2 or Better; No. 2 - medium grain Southern pine.

Species Group 1: Douglas fir, larch, Southern pine.

Species Group 2: Hemlock fir, Douglas fir, south.

Species Group 3: Western pines and cedars, redwood, spruces. **Example:** If the beams are 9 feet 8 inches apart and the Species is Group 2, use the 10 foot column; 3XI0 up to 6 foot spans, 4XI0 or 3XI2 up to 7 foot spans, 4XI2 or 6XI0 up to 9 foot spans, 6XI2 up to 11 footspans.

Inches above ground (grade) level; if posts will be embedded into concrete, the posts must be treated for rot and insect resistance (such as termites).

READY THE SITE

Clean away all trees, shrubs, grass, big rocks, and other debris BEFORE you order material.

The ground should slope away from the house slightly for adequate drainage.

If a lot of soil must be moved to provide this slope, it is recommended that you have the soil moved professionally. The cost may not be as prohibitive as you might think. It's worth a check and three bids.

STAKE OUT THE DECK

With wooden stakes and chalk line, square the deck to the house. By doing his, you also have created the shape of the deck with string.

Take your time with his task. Getting it correct at his point can save you plenty down the line. The stake-out will be used to determine all other deck dimensions as you proceed.

STAKE OUT THE FOOTINGS

Using the stakes again, locate the footing positions. Most posts are set back from the leading edge of the deck by 18 to 24 inches.

If the footing location happens to coincide with an underground utility, you may get the utility moved, or you will have to relocate the deck.

The size and number of footings are determined by the size of the deck and its expected load. Generally, for most decks, footings are placed on 5-foot centers, front, middle, and back. If there will be lots and lots of weight on the deck, the footings can be 4 foot on-center for support. Don't skimp. It's better to overdo it slightly than underdo it.

When you have determined position, stake the position so the stakes are "on-center" within the footing area. An auger or clamshell type posthole digger can be used to dig the footing holes.

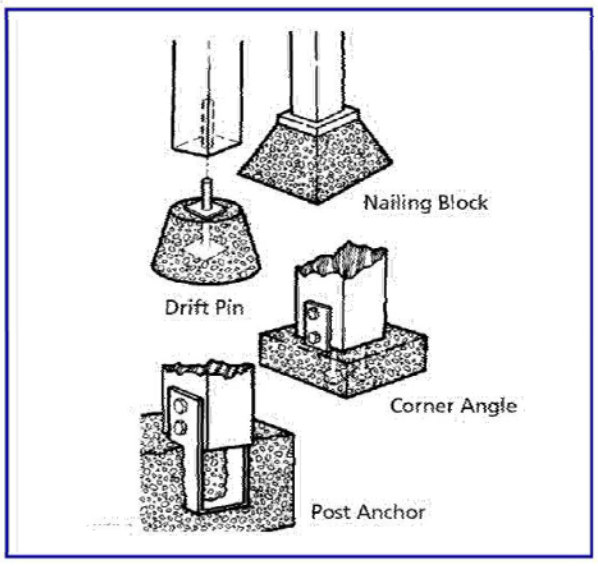

However, it is suggested that you contract his work especially if there are lots of holes for you to dig.

If the footings are circular, you can buy a forming material called Sona Tube. The tube is set in the footing hole, concrete is placed in the tube, and the top leveled. When the concrete has hardened, the tubes can be stripped quickly and easily. If the foundation will be square, you will have to form the top of the hole with 2X4s to create his configuration. After the concrete has hardened in the form for at least 5 days, the forms may be removed. Let the work set longer if possible.

SETTING POSTS & BEAMS

If posts are embedded in concrete footings, square them in the footing when the concrete is placed. If a drift pin, nailing block, post anchor, or corner angle is used for post support, all are positioned on or into the footing at the time the concrete is placed. These fasteners must be level and plumb; double check them to be sure.

Posts are now attached to post-seats with bolts, excepting drift pins. As the post-fastening takes place, use scrap framing lumber to brace the posts.

Attach the beams to the posts. The most efficient way is to tack-nail one beam to the outposts within a row. To do this, first attach the beam closest to the house. It must be level and at the right height. Continue to attach the rest of the beams the same way, leveling them to the first beam installed.

Once the beams are up, select a very straight 2X4 and lay it over the beams. Level it. Check the diagonal level as well. Make any adjustments, and then lag screw all the beams to the posts. Use washers and tlwee or four lags per connection.

Repeat the sequence with another set of beams. Install these on the inside of the posts. Level them and fasten with lags the same way as you did the first set. Double check level.

Now, measure from a constant point on the deck to the beam cutoffbat the end of each set of beams. Verify his by using a chall<line from one end to the other end to make sure all beam ends will be cut at the same point.

INSTALLING THE JOISTS

Joists are set on the beams. Simplify the job by installing the skirt joists first.

Toenail them to the beams and where they cross all other beams. On the inside of the skirt, put down the joist pattern (usually on 24-inch, centers) if your plan calls for it. Then put down one joist. The distance from the center of that joist to the next one will be 24 inches.

Start at one end of the deck and work to the opposite end. Don't be upset if the last two joists have less space than 24 inches. If your decking pattern will be zig-zag, herringbone, or diamond, use blocking between joists. Sight down each joist and set it so the "crown" is facing up.

The joists are nailed to the skirts and at the beams, where possible, and the blocking is nailed to the

joists, at 2 and/or 4 foot, intervals. It is recommended that you use 16d hot-dipped galvanized nails to assemble the deck. You also can use metal connectors to attach or support joists at beams. See drawings.

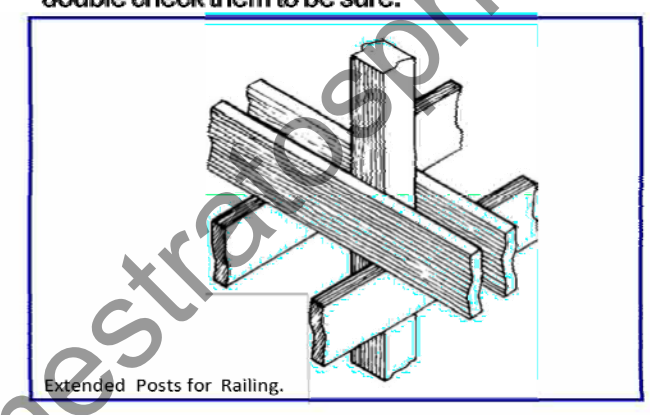

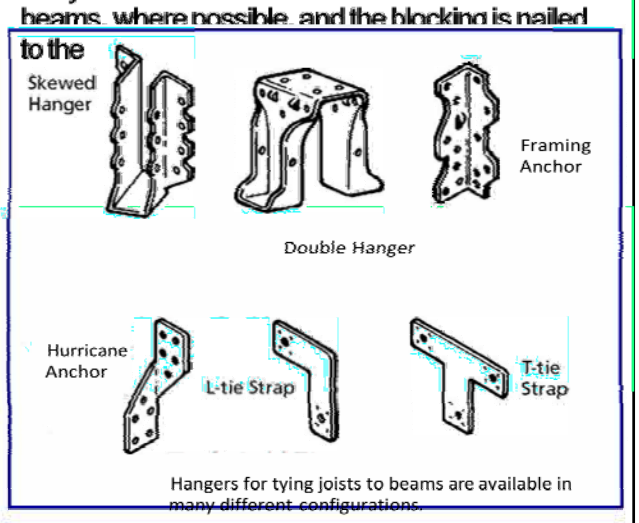

Hangers for tying joists to beams are available in many different configurations.

DOWN WITH THE DECKING

Once the joists are in position, the decking goes down. Make sure that the curved end grain of the wood faces downward to eliminate cupping.

Make the nailing pattern uniform. First lay a chalkline along each joist span. Drive two nails at each joist, along the line. The butt joints of the decking should line up over the joist and be centered. After you nail the first deck board, leave 1/8- to 1/4-inch space between each board. Use 16d hot-dipped galvanized casing nails; the nails also can be used to space between decking boards since they're about 1/8-inch "thick."

If you find the deck boards are not exactly parallel, don't try to correct all of the problem by adjusting the next board. Adjust gradually over the next two, three boards. Keep checking dimensions, based on the first board; chances of misalignment will be much less.

When you're about 6 feet from finishing, plan how to make the last piece of decking fit flush with the skirt. Space the remaining boards to coincide with the edge of the skirt.

If in doubt, lay out the boards to fit the skirt before nailing them down. You are now ready to trim the deck to final dimensions. See the drawing at bottom far right.

TRIMMING THE DECKING

Check all dimensions TWICE before you start the trimming procedures. Trim from the house out.

When you saw, try to keep the saw away from the skirt, unless the deck boards will overlap the skirt. A chalkline will help you see the cut line. To cap the end of the cut decking, as well as to provide an edging strip, you can install a molding piece around the edge of the deck boards.

Railings, steps, and benches are usually added after the deck is completed. If a railing is planned, it can be attached to the skirting or joists-and sometimes the beams. It also can be part of the post structure, but plan it his way at the start.

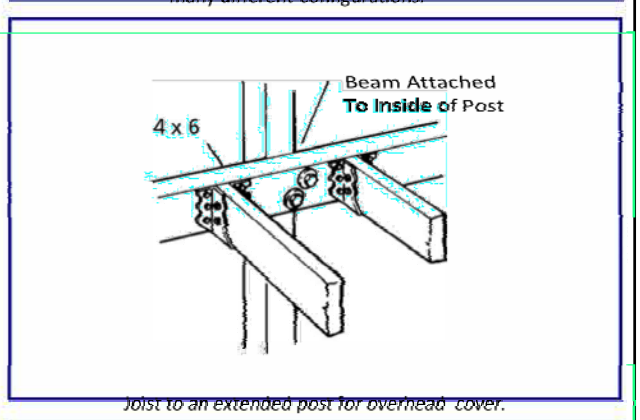

Joist to an extended post for overhead cover.

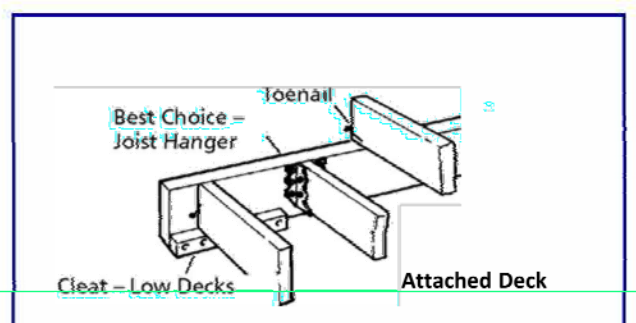

Joists attach to ledger with a cleat, joist hanger, or toenailed on top.

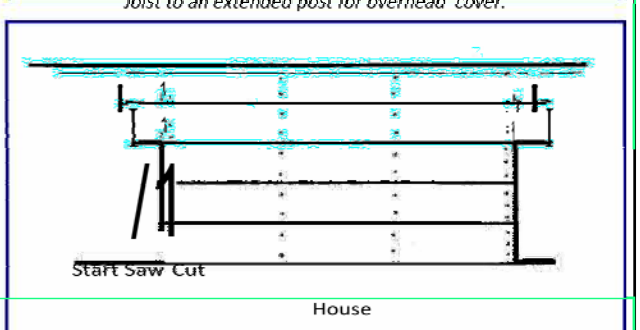

Pre-cut decking that is next to vertical obstructions, such as the side of a house. This way, you can start the saw easier for trimming the rest of the decking boards.

Interior Design and Home Décor Ideas

Interior Design and Home Decor Ideas - Home Stratosphere

GENERAL CONTRACTOR:	DATE DRAWN: 11/19/15 DRAWN BY: SCOTTG SCALE: 3" = 1' REVISIONS: R1	REFERENCE DRAWING: UPWORK PAGE NO. 12.0